Energy Valve

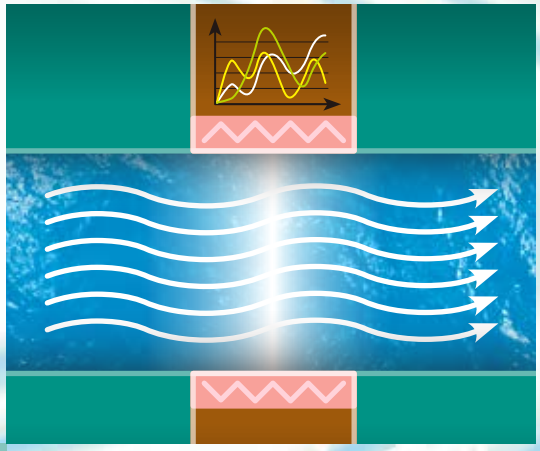

Energy Valve *– measures the load/coil supply and return temperature and calculates the power or energy consumed, and communicates to Higher Building Management levels*

The Energy Valve combines ALL of the following components:

- Belimo CCV (Characterised Control Valve) and actuator.
- Electromagnetic flow sensor.
- Advanced control options including Belimo Delta T Manager.
- Supply and return water temperature sensors, for energy management.
- BACnet MS/TP or BACnet IP network communication.

The Energy Valve is a pressure independent valve that optimises, documents and proves water coil performance. The Energy Valve is a two-way pressure independent valve using the Electronic Pressure Independent Valve (EPIV) platform that measures the coil energy using an embedded electromagnetic flow sensor, water supply and return temperature sensors.
The Energy Valve uses the Belimo Delta T Manager™ algorithm that monitors the coil performance and optimises the available energy of the coil. The Energy Valve has standard analog signal and feedback wiring and communicates data to the DDC system via BACnet Protocol, The actuator stores all the coil performance data such as Delta T and energy usage. All the coil performance data, stored trends and control functions can be sent to the BAS via the data network.

Model No.	Frequency*	V̇	DN		Temperature Sensor	Inlet Length	Cable Length	Rotary Actuator
		[l/s]	[mm]	[inches]				
EV-65-800	50Hz	8.0	65	2 1/2"	PT1000	325mm	3m/0.5m	SRU24LP-65
EV-80-1100	50Hz	11.0	80	3"	PT1000	400mm	3m/0.5m	SRU24LP-80
EV-100-2000	50Hz	20.0	100	4"	PT1000	500mm	3m/0.5m	GRU24LP-100
EV-125-3125	50Hz	31.25	125	5"	PT1000	625mm	3m/0.5m	GRU24LP-125
EV-150-4500	50Hz	45	150	6"	PT1000	750mm	3m/0.5m	GRU24LP-150

Note:
- The Energy Valve (EV) must be ordered together with the SR../GR.. series Rotary Actuator.
- Ordering sample:
  EV-65-800 with SRU24LP-65 Rotary Actuator fitted, order code: EV-65-800 + SRU24LP-65.
  No part on Energy Valve can be ordered as a standard product.
  * Optional of 60Hz.

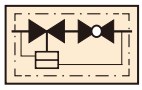

- **Characterised control valve (CCV) with adjustable flow rate, sensor-operated flow control plus output and energy monitoring function, 2-way, with flange PN16**
- **For closed cold and warm water systems**
- **For modulating water-side control of air purification and heating systems**
- **Nominal voltage AC/DC 24V**
- **Communication via BACnet IP or conventional control**

Technical data

Medium	Cold water and hot water, max. 50% volume of glycol
Temperature of medium	System without spindle heater: -5°C...+120°C System with spindle heater: -10°C...+120°C
Rated pressure	1600kPa
Flow characteristic	Equal percentage (following VDI/VDE 2178)
Rangeability	>100
Pipe connector	Flange PN 16 (in accordance with EN1092/1)
Differential pressure	Max. 340kPa
Closing pressure △ps	690kPa
Leakage rate	“Leakage rate A”, EN 12266-1 (air bubble-tight)
Min. pressure loss	22kPa @ V̇nom
Angle of rotation	90°
Installation position	Vertical to horizontal (referred to as the valve stem)
Maintenance	Maintenance-free
Material Valve body Measuring pipe Ball Characterising disc Stem Stem seal Ball seat Grounded	 Cast iron - GG25 GGG50 with protective paint, EN-GJS-500-7U Stainless steel Stainless steel Stainless steel EPDM Peroxide PTFE, O-ring Viton Flow unit needs to be grounded
Inlet length	5xDN
Measuring principle	Electromagnetic inductive volumetric flow measurement
Flow sensor accuracy	±2%
Flow meaurement tolerance	±6% (of 25...100% V̇nom) (±5% at 2...20°C media temperature)
Control accuracy	±10% (of 25...100% V̇nom)
Adjustable flow rate V̇max	30...100% V̇nom
Min. flow measurement	2.5% @
Sound power level	≤ 70dBA
Flow sensor Nominal voltage	 AC 24V 50Hz, DC 24V
Temperature sensor	PT1000
Max. pressure drop measuring pipe	<30kPa @ V̇nom
Temperature measurement tolerance	According to EN60751 Class B
Repeat accuracy of indication	±0.5%
Resolution	0.05°C
Dimensions and weight	See “Dimensions and weight” on page 44

Mode of operation

The Energy Valve is comprised of 4 components: characterised control valve (CCV), measuring pipe with medium velocity sensor, temperature sensors and the actuator itself. First of all, the maximum flow rate ($\dot{V}$max) is set on the actuator, whereby $\dot{V}$max is permitted to represent 30% to 100% of the greatest possible flow rate $\dot{V}$nom. At the same time. the $\dot{V}$max value is assigned to the maximum control signal (typically 10V). Because of the fact that the characterised control signal for the flow rate (CCV) exhibits an equal percentage valve characteristic curve, the flow rate is also depicted in equal percentages, i.e. 70% of the control signal corresponds to 38% of the $\dot{V}$max value.

In conventional operation, the actuator is connected to a standard DC 0.5...10V signal. The medium flows in the measuring pipe with a velocity of up to 2m/s, is detected by the sensor and is applied as the flow value. The standard signal is compared in the actuator with the measured flow value. Depending on the deviation, the actuator moves the ball of the Characterised Control Valve (CCV) into the required position and acts as a throttling device. The angle of rotation varies, depending on the differential pressure, by means of the final controlling element (see Flow rate curves).

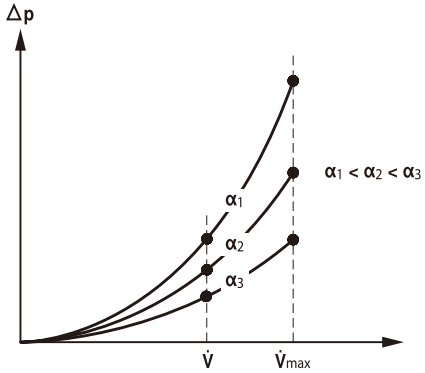

The angle of rotation (α) will differ, depending on the differential pressure (△p) and the flow rate $\dot{V}$

Mode of operation

Power and energy monitoring function

The actuator is equipped with two temperature sensors. One sensor (T2) is integrated in the measuring pipe, the second sensor (T1) is enclosed with the system, already wired, and must be installed in the water circulation at the site. The sensors are used to record the medium temperatures of the supply and return lines of the consumer (heat/cold register). As the water quantity is also known thanks to the volumetric flow measurement integrated in the system, the power released from the consumer can be calculated. Furthermore, the heating /cooling energy is also determined automatically by means of the evaluation of the power over time.

Data recording

The recorded data (integrated data recording for up to 13 months) can be used for the optimisation of the overall system and for the determination of the performance of the consumer.

Download csv files through web browser.

Manual override

Manual override with push-button possible (the gear is disengaged for as long as the button is pressed or remains locked).

High functional reliability

The actuator is overload-proof, requires no limit switches and automatically stops when the end stop is reached.

Home position

The actuator moves to the home position when the supply voltage is switched on for the first time, i.e. at the time of commissioning or after pressing the ‘gear disengagement’ key. The actuator then moves into the position defined by the positioning signal.

Parameterisation

The parameterisation can be carried out simply and rapidly through the integrated web server.

The actuator can be installed **standing** to **lying**.

Recommended installation positions

The characterised control valve may not be installed in a hanging position i.e. with the spindle pointing downwards.

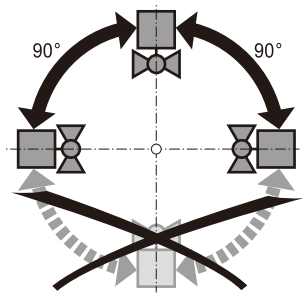

Tool connection

Parameterisation can be performed quickly and easily using the integrated web server (RJ45 connection to web browser) or with BACnet IP.

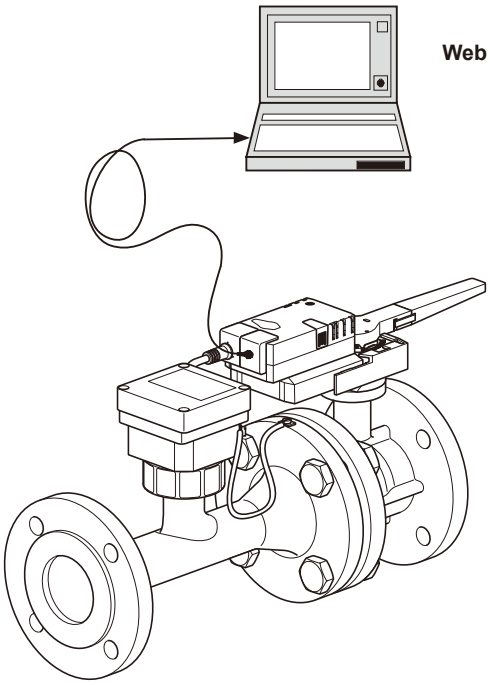

IP address setting
Default: 192.168.0.10 / 255.255.255.0 / 0.0.0.0
http://192.168.0.10:8080
The notebook must have an address in the same IP-range
Password (reading only)
User name: “guest”
Password: “guest”

Functionality

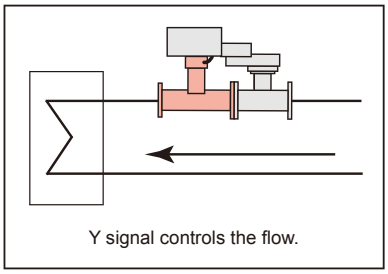

Characterised Position Control

The position of actuator is controlled with the Y-Signal. The Energy Valve works like a normal pressure dependent valve. The actuator is positioned based on the DDC control signal.

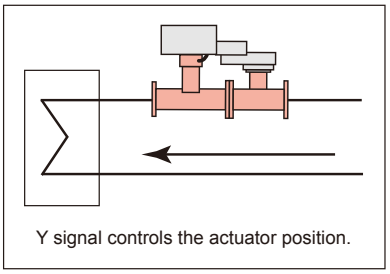

Pressure Independent Flow Control

The flow is controlled with the Y-Signal. The Energy Valve works like an EPIV. The valve senses any change in flow and modulates the actuator to maintain the flow setpoint based on the DDC control signal.

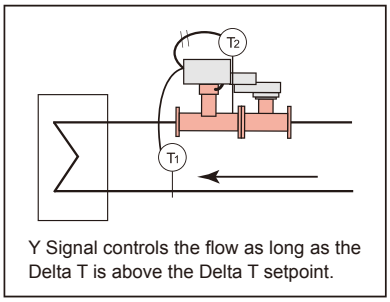

Characterised Position Control + Delta T Manager

The position of actuator is controlled with the Y-Signal. The Energy Valve works like a pressure dependent valve. If the measured Delta T is lower than the defined min. Delta T, regardless of the control signal Y, the maximum flow will be limited by Delta T Manager logic.

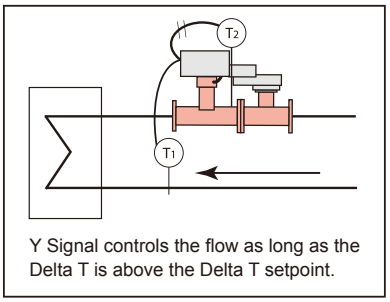

Pressure Independent Flow + Delta T Manager

The flow is controlled with the Y-Signal. The Energy Valve works like an EPIV but if the measured Delta T is lower than the defined min. Delta T, regardless of the control signal Y, the maximum flow will be limited by Delta T Manager logic.

Flow control

Accurate and automatic flow control are achieved through the Energy Valve's electromagnetic flow sensor and patented characterising disc, which has high rangeability and turndown ratio. The equal percentage characteristic of the disc decreases "hunting" and stabilises system output through small, incremental changes in water flow during the first 10 to 30 degrees of valve opening - where control is most critical. Automatic flow control is enabled through the combination of an accurate flow sensor and powerful algorithm that modulates the control valve to maintain the exact flow.

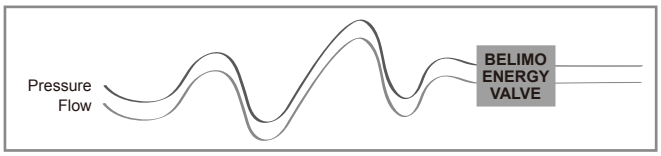

Monitoring and adjustment

In addition, the Belimo Delta T Manager continuously monitors the coil Delta T and compares this value with the desired Delta T value or setpoint. For example in a cooling application, if the actual Delta T is below the setpoint, the valve will readjust flow to bring Delta T back to the desired setpoint. Once the appropriate Delta T is re-established, the valve control resumes its normal operating mode taking its signal from the DDC controller.

The software monitors and can trend all sensed or calculated values for up to 13 months. These values include water flow, return and supply water temperature, power, energy, or media density and more.

Trending and diagnostics

All of the data that the Energy Valve continuously collects is reported back to the BAS, where it can be accessed for virtually unlimited trending and diagnostics. For instance, a downward trend in the coil power output could signal that the coil is in need of servicing.

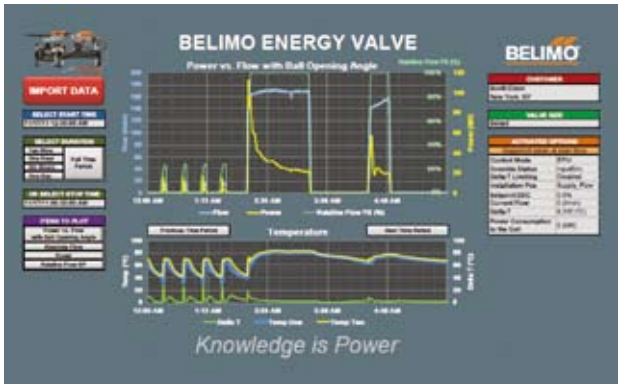

Remote sensor installation

A thermo well is provided with the remote temperature sensor. The well should be installed on the pipe installing the remote temperature sensor. The remote temperature sensor should be installed on the opposite pipe entering the coil from where the Energy Valve is installed. A 1/2" NPT female union should be welded on the pipe to allow the installation of the thermo well.

The valve is provided with a 3m cable. The valve uses a signal loss compensation based on cable length, that's why it is so important to only cut the wire to the specified length. Cutting the wire to a different length will cause inaccuracies on the Energy calculations.
If the cable is cut, the new length needs to be configured on the valve. Optional cable lengths below can be ordered:

1.5m

5m

10m

The new cable length will need to be set in web-view.

DN [mm]	EL	ET	Lmax.
65	93	60	30
80	93	60	30
100	93	60	30
125	93	60	30
150	93	60	30

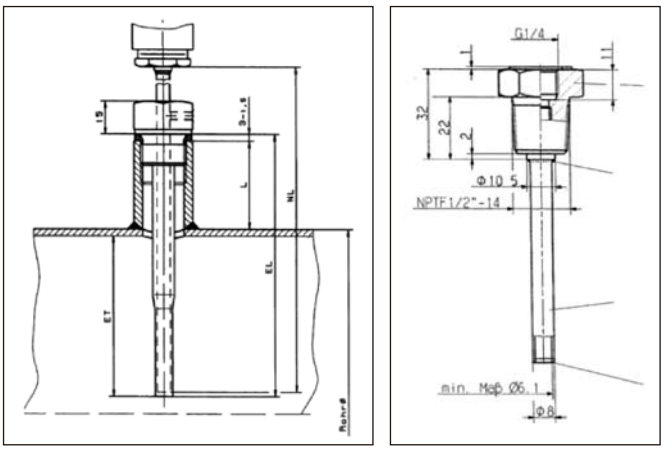

How to install the remote sensor pocket

Safety notes

The device has been designed for use in stationary heating, ventilation and air conditioning systems and is not allowed to be used outside the specified field of application, especially in aircraft or in any other airborne means of transport.

It may only be installed by suitably trained personnel. Any legal regulations or regulations issued by authorities must be observed during installation.

The device may only be opened at the manufacturer's site. It does not contain any parts that can be replaced or repaired by the user.

The connection between the control valve and the measuring tube should not be separated. The cable must not be removed from the device.

The device contains electrical and electronic components and is not allowed to be disposed of as household refuse. All locally valid regulations and requirements must be observed.

V1.1 05.2013•Subject to modification

Communication-capable Rotary Actuator for EV system

- **Torque: 20Nm**
- **Nominal voltage: AC/DC 24V**
- **Communication via BACnet IP, BACnet MSTP or conventional control**
- **Conversion of sensor signals**
- **Multifunction control: SRU24LP-65**
  SRU24LP-80

Technical data

Electrical data	Nominal voltage	AC 24V 50/60Hz, DC 24V
	Power supply range	AC 19.2...28.8V / DC 21.6...28.8V
	Power consumption For transformer sizing	6.5W @ nominal torque 20VA
	Connecting cable	Cable 1m, 4 x 0.75mm^{2}, RJ45 socket (Ethernet)
Function data	Torque (nominal torque)	Min. 20Nm @ nominal voltage
	Control communicative	BACnet IP BACnet Application Specific Controller (B-ASC) Details see separate PICS
	Control conventional Control signal Y Working range Feedback U	DC (0)2...10V @ input impedance 100kΩ DC 0...10V DC (0)2...10V
	Running time	90s
	Sound power level	~45dB(A)
	Position indicatior	Mechanical, plug-on
Working conditions	Protection class	III (Safety extra-low voltage) / UL Class 2 Supply
	Degree of protection	IP54 / NEMA 2, UL Enclosure Type 1 / NEMA 1
	EMC	CE according to 2004/108/EC
	Mode of operation	Type 1 (EN 60730-1)
	Rate impulse voltage	0.8kV (EN 60730-1)
	Ambient temperature range	-10...+50°C
	Non-operating temperature range	-20...+80°C
	Humidity	5...95% RH, non-condensing
	Maintenance	Maintenance-free
Dimensions/weight	Dimensions	See “Dimensions” on page 43
	Weight	1.36kg

BELIMO

Communication-capable Rotary Actuator for EV system

- **Torque: 40Nm**
- **Nominal voltage: AC/DC 24V**
- **Communication via BACnet IP, BACnet MSTP or conventional control**
- **Conversion of sensor signals**
- **Multifunction control: GRU24LP-100**
  GRU24LP-125
  GRU24LP-150

Technical data

Electrical data	Nominal voltage	AC 24V 50/60Hz, DC 24V
	Power supply range	AC 19.2...28.8V / DC 21.6...28.8V
	Power consumption - running For transformer sizing	9W @ nominal torque 20VA
	Connecting cable	Cable 1m, 4 x 0.75mm^2, RJ45 socket (Ethernet)
Function data	Torque (nominal torque)	Min. 20Nm @ nominal voltage
	Control communicative	BACnet IP BACnet Application Specific Controller (B-ASC) Details see separate PICS
	Control conventional Control signal Y Working range Feedback	DC (0)2...10V @ input impedance 100kΩ DC 0...10V DC (0)2...10V
	Running time	90s
	Sound power level	~45dB(A)
	Position indicatior	Mechanical, plug-on
Working conditions	Protection class	III (Safety extra-low voltage) / UL Class 2 Supply
	Degree of protection	IP54 / NEMA 2, UL Enclosure Type 1 / 1NEMA 1
	EMC	CE according to 2004/108//EC
	Mode of operation	Type 1 (EN 60730-1)
	Rate impulse voltage	0.8kV (EN 60730-1)
	Ambient temperature range	-10...+50°C
	Non-operating temperature range	-20...+80°C
	Humidity	5...95% RH, non-condensing
	Maintenance	Maintenance-free
Dimensions/weight	Dimensions	See “Dimensions” on page 43
	Weight	2.5kg

V1.1 05.2013 • Subject to modification

Wiring diagrams

Notes
- Connection via safety isolation transformer
- Parallel connection of other actuators possible. Observe the performance data.

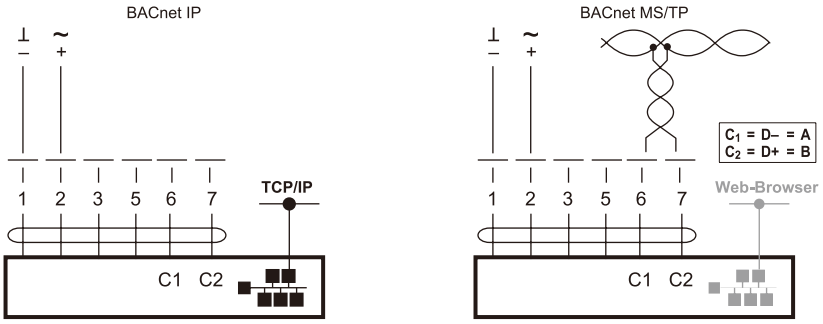

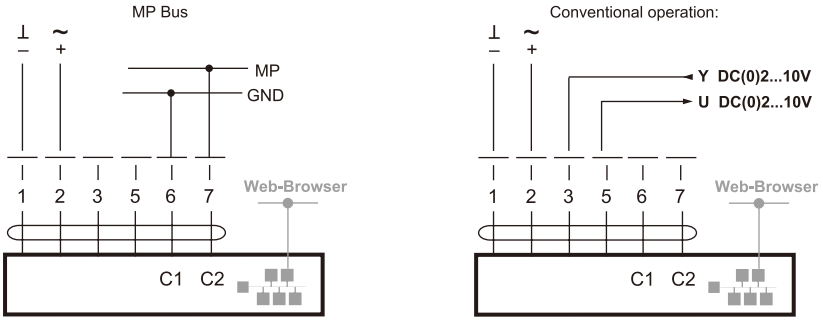

Cable colours:
1 = black
2 = red
3 = white (3)
5 = orange (5)
6 = pink
7 = grey

Dimensions [mm]

SRU..

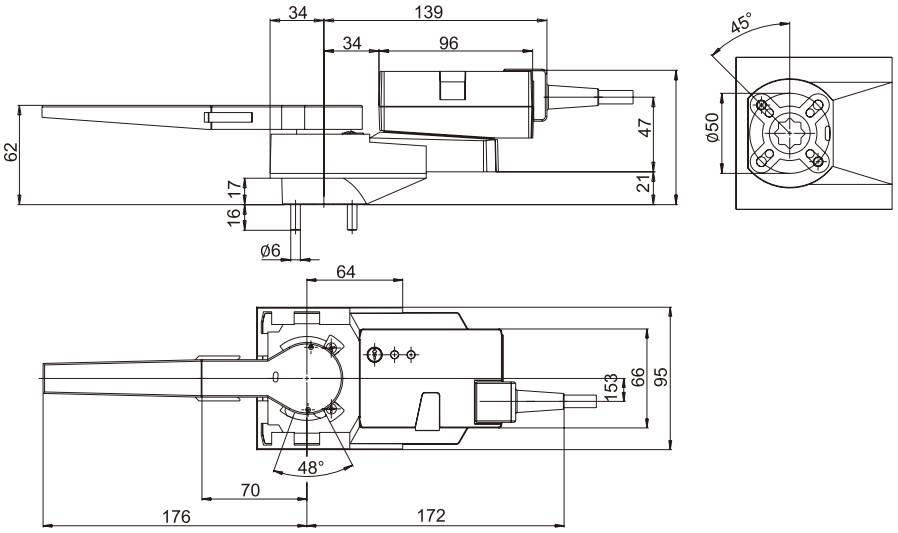

GRU..

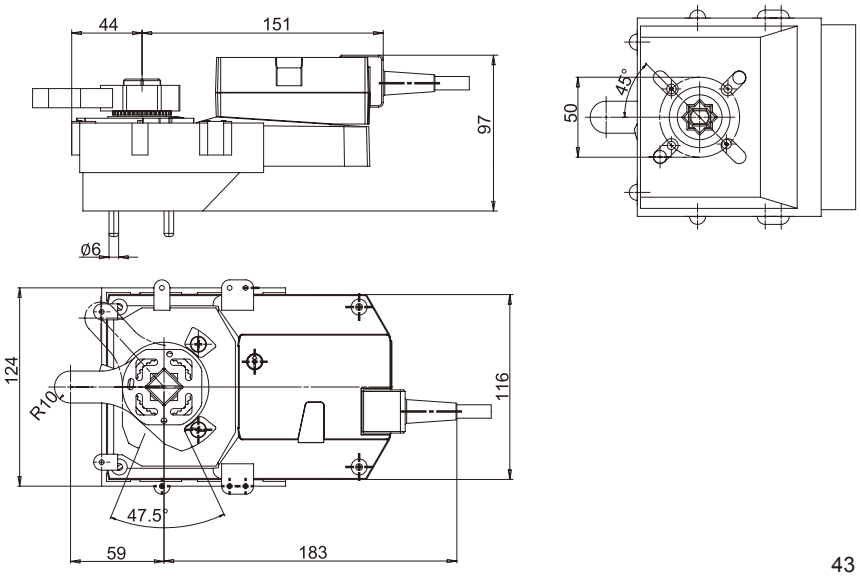

Valve and Actuator Dimensions and Weight

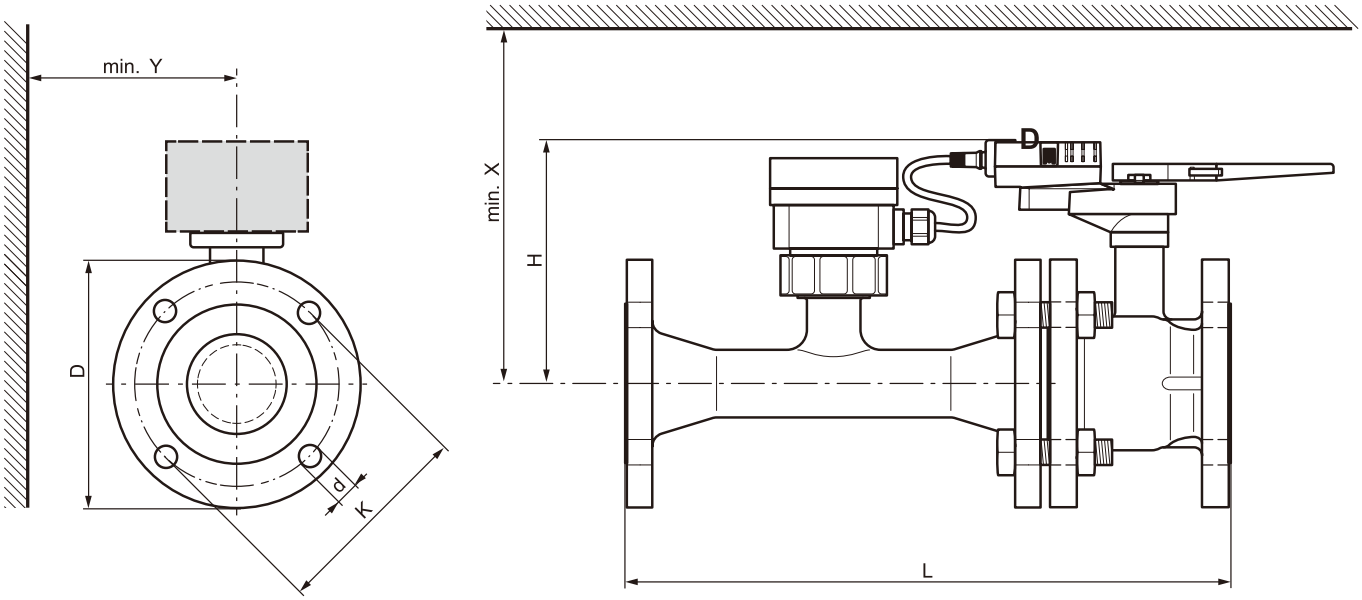

DN [mm]	L [mm]	H [mm]	D [mm]	K [mm]	d [mm]	X 1) [mm]	Y 1) [mm]	Weight [kg]
65	454	113	185	145	4 x 19	311	150	23.2
80	499	113	200	160	8 x 19	311	150	28.3
100	582	208	229	180	8 x 19	228	165	40.1
125	640	240	254	210	8 x 19	260	180	54.3
150	767	240	282	240	8 x 24	260	180	69.6

1) Minimum distance with respect to the valve centre.
2) The actuator dimensions can be found on the respective actuator data sheet.

Orientation

Energy Valve shall be installed with flow in the direction of the arrow on the valve body.
The valve assembly can be installed in a vertical or horizontal arrangement, as long as the actuator is positioned to avoid condensation from dripping onto the actuator.

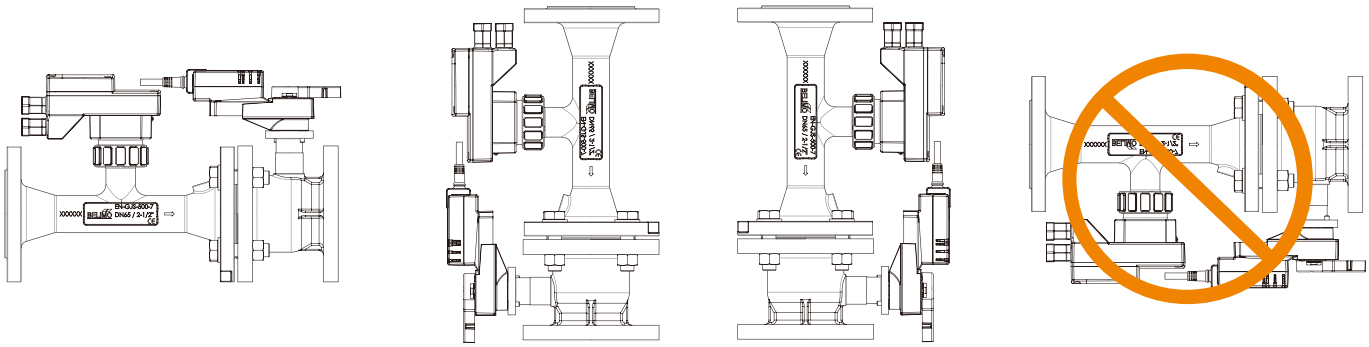

BACnet object description

Object Name	Object Type / Instance	Description	Values	Default
Device_Name	Device [x]			
SpRel	Analog Output [1]	Setpoint Relative in % The set point is interpreted either as position setpoint or as flow setpoint (related to Vmax). See Control Mode for more information.	0...100	0
RelPos	Analog Input [1]	Relative Position in %	0...100	-
AbsPos	Analog Input [2]	Absolute Position in °	0...90	-
RelFlow	Analog Input [10]	Relative Flow in %	0...100	-
AbsFlow_SI1	Analog Input [11]	Absolute Flow in l/min	0...100'000	-
AbsFlow_SI2	Analog Input [12]	Absolute Flow in m3/h	0...600	-
AbsFlow_US	Analog Input [13]	Absolute Flow in gpm	0...1000	-
T1-SI	Analog Input [20]	Temperature 1 (remote) in °C	-10...+120	-
T2-US	Analog Input [25]	Temperature 1 (remote) in °F	14...248	-
T2-SI	Analog Input [21]	Temperature 2 (embedded) in °C	-10...+120	-
T2-US	Analog Input [26]	Temperature 2 (embedded) in °F	14...248	-
Delta T_SI	Analog Input [22]	Delta T in °C	-500...+500	-
Delta T_US	Analog Input [27]	Delta T in °F	-500...+500	-
P_SI	Analog Input [30]	Power in kW	0...2.147e+9	-
P_US	Analog Input [35]	Power in kBTU/h	0...2.147e+9	-
E_Cooling_SI	Analog Input [31]	Cooling Energy in kWh	0...2.147e+9	-
E_Cooling_US	Analog Input [36]	Cooling Energy in kBTU	0...2.147e+9	-
E_Heating_SI	Analog Input [32]	Heating Energy in kWh	0...2.147e+9	-
E_Heating_US	Analog Input [37]	Heating Energy in kBTU	0...2.147e+9	
Override	Multi-state Output [1]	Override Control	Auto Close Open Vmax Vnom Stop	Auto
Vmax	Analog Value [100]	Maximum Flow Limit in %	0...100	100
V'nom_SI	Analog Value [101]	Nominal volume flow in l/min (read only)	0...100'000	-
V'nom_US	Analog Value [102]	Nominal volume flow in gpm (read only)	0...100'000	-
Control Mode	Multi-state Value [100]	Control Mode The value defines the interpretation of the setpoint.	PosCtrl FlowCtrl	FlowCtrl
Delta T_Limitation	Multi-state Value [101]	Delta T Limitation	NoLimiting Delta T Limting	NoLimiting
SpDeltaT_SI	Analog Value [103]	Setpoint Delta T in °C	4...20	0
SpDeltaT_US	Analog Value [104]	Setpoint Delta T in °F	7...36	0

Ordering sample

Valve

The range includes the Energy Valve.

Sizes: DN65...150

Assembling

The prices quoted are per sub-assembly (valve and actuator).

A successful order will need the below-mentioned information:

Neither the actuator nor the flow sensor and valve can be ordered as an individual product.

Actuator types

For motorising valves, there are two rating classes of actuators available that are suitable for different power supplies and methods of control.

---

① Valve

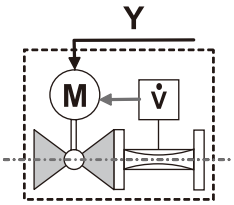

2-way

The short product list is arranged as follows:

- Energy Valve

---

② Assembling

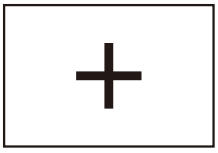

Actuator fitted

The valves and actuators can be supplied as follows:

- Actuator fitted (+)

---

③ Actuator types

SRU24LP..

GRU24LP..

The following data must be provided:

- Power frequency must be confirmed whether 50Hz or 60Hz

Ordering example:

Designation:	**EV-65-800 + SRU24LP-65**
	① ② ③
① Valve type:	
Design	Energy Valve + Sensor
Size	Power frequency 50Hz / 60Hz
Flow rate	V̇nom = 8.0l/s
② Assembling	Actuator fitted
③ Actuator	Actuator model
Nominal voltage	Rotary Actuator AC/DC 24V
Running time	90s

V1.1 05.2013 • Subject to modification

ASIA PACIFIC HEADQUARTERS
Belimo Actuators Ltd.
Room 207, 2/F, New Commerce Center
19 On Sum Street, Shatin, N.T.
Hong Kong
Tel: +852 2687 17 16
Fax: +852 2687 17 95
E-mail: info.asiapacific@belimo.ch

Belimo AUSTRALIA
Melbourne Office:
Belimo Actuators Pty. Ltd.
12 Enterprise Court
Mulgrave Business Park
Mulgrave, VIC 3170, Australia
Tel: +61 (0)3 9545 0844
Fax: +61 (0)3 9545 0855
E-mail: info.australia@belimo.ch

Sydney Office:
Belimo Actuators Pty. Ltd.
Suite 2.20, 32 Delhi Road
North Ryde, NSW 2113, Australia
Tel: +61 (0)2 9805 1777
Fax: +61 (0)2 9805 1722
E-mail: info.australia@belimo.ch

Belimo CHINA
Shanghai Office:
Belimo Actuators (Shanghai) Trading Ltd.
479 Chun Dong Road, Building C-2
Xin Zhuang Industry Park
Shanghai 201108
P.R. China
Tel: +86 21 5483 2929
Fax: +86 21 5483 2930
E-mail: info.shanghai@belimo.ch

Beijing Office:
Belimo Actuators Ltd.
Room 605, Hai Chang Edifice
44 Liang Ma Qiao Road
Beijing 100016
P.R. China
Tel: +86 10 6462 1382
Fax: +86 10 6462 1383
E-mail: info.beijing@belimo.ch

Chongqing Office:
Belimo Actuators Ltd.
Room 4, 9th floor, Unit 7, Luoma Jiari Gardan
No. 36, Qing Ling Road, Nan'an District
Chongqing 400060
P.R. China
Tel: +86 23 6275 3155
Fax: +86 23 6280 3380 *519
E-mail: info.chongqing@belimo.ch

Guangzhou Office:
Belimo Actuators Ltd.
Room 1202, Skyline Plaza
644 Tong Fu East Road, Haizhu Area
Guangzhou 510240
P.R. China
Tel: +86 20 3435 1860
Fax: +86 20 3435 1870
E-mail: info.guangzhou@belimo.ch

Belimo HONG KONG
Hong Kong Office:
Belimo Actuators Ltd.
Room 207, 2/F, New Commerce Center
19 On Sum Street, Shatin, N.T.
Hong Kong
Tel: +852 2687 17 16
Fax: +852 2687 17 95
E-mail: info.hongkong@belimo.ch

Japan Office:
Belimo Actuators Ltd.
7th Floor, Honjo-Azumabashi DJ Building
4-19-3, Honjo, Sumida-ku
Tokyo 130-0004 Japan
Tel: +81-3-6823-6961
Fax: +81-3-3626-3911
E-mail: info.japan@belimo.ch

Malaysia Office:
Belimo Actuators Ltd.
12-1, Jalan PJS 10/2, Subang Indah
46000 Petaling Jaya Selangor, Malaysia
Tel: +603 5631 2188
Fax: +603 5638 2189
E-mail: info.malaysia@belimo.ch

Singapore Office
Belimo Actuators Ltd.
1 Tannery Road #08-04, One Tannery
Singapore 347719
Tel: +65 6842 1626
Fax: +65 6842 1630
E-mail: info.singapore@belimo.ch

Taiwan Office:
Belimo Actuators Ltd.
7F-2, No.343, Jhonghe Road, Yonghe City
Taipei County 234, Taiwan
Tel: +886 2 2922 8805
Fax: +886 2 2922 8806
E-mail: info.taiwan@belimo.ch

Thailand Office:
Belimo Actuators Ltd.
90/2 Pensiri Place
Soi Phaholyothin 32, Phaholyothin Road
Chandrakasem, Jatujak
Bangkok 10900, Thailand
Tel: +662 9415582-3
Fax: +662 9415584
E-mail: info.thailand@belimo.ch

Belimo INDIA
Mumbai Office:
Belimo Actuators India Pvt. Ltd.
23/ ABCD, Govt. Industrial Estate,
Charkop, Kandivali West,
Mumbai 400067, India
Tel: +91 22 4025 4800
Fax: +91 22 4025 4899
E-mail: info.india@belimo.ch

Bangalore office:
Belimo Actuators India Pvt. Ltd.
Sreerama Complex,
No. 13, 2nd Floor, 5th Cross Road,
6th Block, Koramangala,
Bangalore – 560097, India
Tel: +91-80-40906311
Fax: +91-80-40906288
E-mail: info.india@belimo.ch

New Dehli Office:
Belimo Actuators India Pvt. Ltd.
Flat No. 516, DLF Tower – B,
Jasola Distt. Centre, Jasola,
New Delhi 110025, India
Tel: +91 11 41078501 to 41078507
Fax: +91 11 41078508
E-mail: info.india@belimo.ch

Chennai Office:
Belimo Actuators India Pvt. Ltd.
#25, Bagavadam Street, T-Nagar
Chennai - 600017, India
Tel: 91 44 42999450
Fax: 91 44 42999451
E-mail: info.india@belimo.ch

Innovation, Quality and Consultancy:

A partnership for motorising HVAC actuators

FIRE & SMOKE

DAMPER

PICCV
EPIV
EV

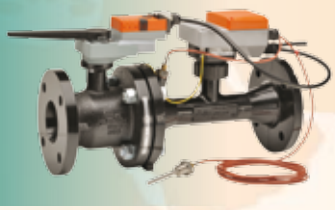

CCV

BUTTERFLY VALVE

- 5 year warranty
- On site around the globe
- A complete range of products from one source
- Tested quality
- Short delivery times
- Comprehensive support

93010-00163

Belimo regional head offices

EU BELIMO Automation AG
Brunnenbachstrasse 1
8340 Hinwil, Switzerland
Tel: +41 43 843 61 11
Fax: +41 43 843 62 68
E-mail: info@belimo.ch

AP Belimo Actuators Ltd.
Room 207, 2/F, New Commerce Center
19 On Sum Street, Shatin, N.T., Hong Kong
Tel: +852 2687 1716
Fax: +852 2687 1795
E-mail: info.asiapacific@belimo.ch

US BELIMO Aircontrol (USA), Inc.
43 Old Ridgebury Road
Danbury, CT 06813-2928
USA
Tel: +800 543-9038 / 203 791-9915
Fax: +800 228-8283 / 203 791-9919

Or contact your nearest Sales Representative

www.belimo.com

BELIMO®