Communicative globe valve actuator for 2-way and 3-way globe valves

- **Actuating force 2500 N**
- **Nominal voltage AC/DC 24 V**
- **Control modulating, communicative DC (0)2...10 V Variable**
- **Nominal stroke 40 mm**
- **Conversion of sensor signals**
- **Communication via Belimo MP-Bus**

MP BUS

Technical data

Electrical data	Nominal voltage	AC/DC 24 V
	Nominal voltage frequency	50/60 Hz
	Nominal voltage range	AC 19.2...28.8 V / DC 21.6...28.8 V
	Power consumption in operation	4 W
	Power consumption in rest position	1.5 W
	Power consumption for wire sizing	6 VA
	Connection supply / control	Terminals with cable 1 m, 4 x 0.75 mm² (Terminal 4 mm²)
	Parallel operation	Yes (note the performance data)
Functional data	Actuating force motor	2500 N
	Positioning signal Y	DC 0...10 V
	Positioning signal Y note	Input impedance 100 kΩ
	Control signal Y variable	Open/Close 3-point (AC only) Modulating (DC 0...32 V)
	Operating range Y	DC 2...10 V
	Operating range Y variable	Start point DC 0.5...30 V End point DC 2.5...32 V
	Position feedback U	DC 2...10 V
	Position feedback U note	Max. 0.5 mA
	Position feedback U variable	Start point DC 0.5...8 V End point DC 2.5...10 V
	Position accuracy	5% absolute
	Manual override	With push-button, can be locked
	Nominal stroke	40 mm
	Actuating time motor	150 s / 40 mm
	Actuating time variable	90...150 s / 40 mm
	Adaption setting range	manual (automatic on first power-up)
	Adaption setting range variable	No action Adaption when switched on Adaption after pushing the gear disengagement button
	Override control	MAX (maximum position) = 100% MIN (minimum position) = 0% ZS (intermediate position, AC only) = 50%
	Override control variable	MAX = (MIN + 33%)...100% MIN = 0%...(MAX – 33%) ZS = MIN...MAX
	Sound power level motor	56 dB(A)
	Position indication	Mechanically, 5...40 mm stroke
Safety	Protection class IEC/EN	III Safety extra-low voltage
	Protection class UL	UL Class 2 Supply
	Degree of protection IEC/EN	IP54
	Degree of protection NEMA/UL	NEMA 2, UL Enclosure Type 2
	EMC	CE according to 2014/30/EU
	Certification IEC/EN	IEC/EN 60730-1 and IEC/EN 60730-2-14
	Certification UL	cULus according to UL 60730-1A, UL 60730-2-14 and CAN/CSA E60730-1:02
	Mode of operation	Type 1

Technical data

Safety	Rated impulse voltage supply / control	0.8 kV
	Control pollution degree	3
	Ambient temperature range	0...50°C
	Non-operating temperature	-40...80°C
	Ambient humidity	95% r.h., non-condensing
	Maintenance	Maintenance-free
Weight	Weight	4.3 kg

Safety notes

- This device has been designed for use in stationary heating, ventilation and air conditioning systems and must not be used outside the specified field of application, especially in aircraft or in any other airborne means of transport.
- Only authorised specialists may carry out installation. All applicable legal or institutional installation regulations must be complied during installation.
- The switch for changing the direction of motion and so the closing point may be adjusted only by authorised specialists. The direction of motion is critical, particularly in connection with frost protection circuits.
- The device may only be opened at the manufacturer's site. It does not contain any parts that can be replaced or repaired by the user.
- The device contains electrical and electronic components and must not be disposed of as household refuse. All locally valid regulations and requirements must be observed.

Product features

Mode of operation

Conventional operation:
The actuator is connected with a standard modulating signal of DC 0...10V and drives to the position defined by the positioning signal. The measuring voltage U serves for the electrical display of the actuator position 0...100% and as slave control signal for other actuators.
Operation on the MP-Bus:
The actuator receives its digital positioning signal from the higher level controller via the MP-Bus and drives to the position defined. Connection U serves as communication interface and does not supply an analogue measuring voltage.

Converter for sensors

Connection option for a sensor (passive or active sensor or switching contact). The MP actuator serves as an analogue/digital converter for the transmission of the sensor signal via MP-Bus to the higher level system.

Parameterisable actuators

The factory settings cover the most common applications. Single parameters can be modified with the Belimo Service Tools MFT-P or ZTH AP.

Simple direct mounting

Simple direct mounting on the globe valve by means of form-fit hollow clamping jaws. The actuator can be rotated by 360° on the valve neck.

Manual override

Manual override with push-button possible (the gear is disengaged for as long as the button is pressed or remains locked).
The stroke can be adjusted by using a hexagon socket screw key (5 mm), which is inserted into the top of the actuator. The stroke spindle extends when the key is rotated clockwise.

High functional reliability

The actuator is overload protected, requires no limit switches and automatically stops when the end stop is reached.

Combination valve/actuator

Refer to the valve documentation for suitable valves, their permitted medium temperatures and closing pressures.

Position indication

The stroke is indicated mechanically on the bracket with tabs. The stroke range adjusts itself automatically during operation.

Home position

Factory setting: Actuator spindle is retracted.
When valve-actuator combinations are shipped, the direction of motion is set in accordance with the closing point of the valve.
The first time the supply voltage is switched on, i.e. at the time of commissioning, the actuator carries out an adaption, which is when the operating range and position feedback adjust themselves to the mechanical setting range.
The actuator then moves into the position defined by the positioning signal.

Product features

Direction of stroke switch
When actuated, the direction of stroke switch changes the running direction in normal operation.

Adaption and synchronisation
An adaption can be triggered manually by pressing the “Adaption” button or with the PC-Tool. Both mechanical end stops are detected during the adaption (entire setting range).
Automatic synchronisation after pressing the gearbox disengagement button is configured. The synchronisation is in the home position (0%).
The actuator then moves into the position defined by the positioning signal.
A range of settings can be adapted using the PC-Tool (see MFT-P documentation)

Accessories

	Description	Type
Gateways	Gateway MP for BACnet MS/TP, AC/DC 24 V	UK24BAC
	Gateway MP to Modbus RTU, AC/DC 24 V	UK24MOD
	Gateway MP to LonWorks, AC/DC 24 V, LonMark certified	UK24LON
	Gateway MP to KNX, AC/DC 24 V, EIBA certified	UK24EIB

	Description	Type
Electrical accessories	Connecting cable 5 m, A+B: RJ12 6/6, To ZTH/ZIP-USB-MP	ZK1-GEN
	Connection cable 5 m, A: RJ11 6/4, B: Free wire end, To ZTH/ZIP-USB-MP	ZK2-GEN
	MP-Bus power supply for MP actuators, AC 230/24V for local power supply	ZN230-24MP
	Connecting board MP bus suitable for wiring boxes EXT-WR-FP..-MP	ZFP2-MP
	Auxiliary switch, 2 x SPDT, add-on, grey	S2A-H

	Description	Type
Service Tools	Service Tool, for MF/MP/Modbus/LonWorks actuators and VAV-Controller	ZTH AP
	Belimo PC-Tool, software for adjustments and diagnostics	MFT-P
	Adapter to Service Tool ZTH	MFT-C

Electrical installation

Notes

- Connection via safety isolating transformer.
- Parallel connection of other actuators possible. Observe the performance data.
- Direction of stroke switch factory setting: Actuator spindle retracted.

Wiring diagrams

AC/DC 24 V, modulating

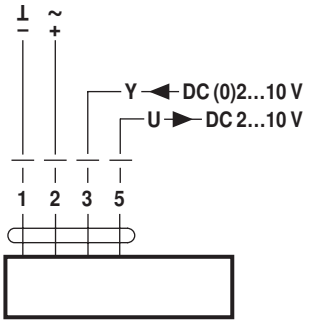

Cable colours:
1 = black
2 = red
3 = white
5 = orange

Operation on the MP-Bus

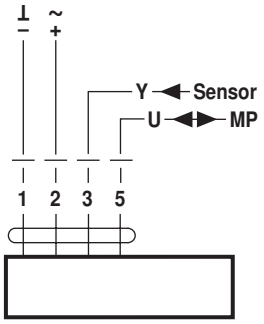

Cable colours:
1 = black
2 = red
3 = white
5 = orange

Functions

Functions when operated on MP-Bus

Connection on the MP-Bus

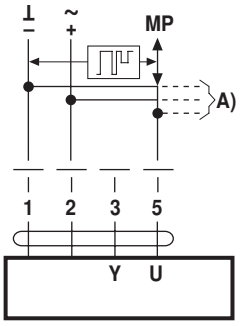

Network topology

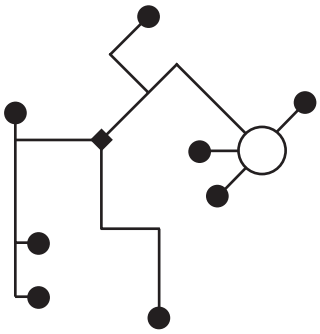

There are no restrictions for the network topology (star, ring, tree or mixed forms are permitted).
Supply and communication in one and the same 3-wire cable
- no shielding or twisting necessary
- no terminating resistors required

A) more actuators and sensors (max.8)

Connection of external switching contact

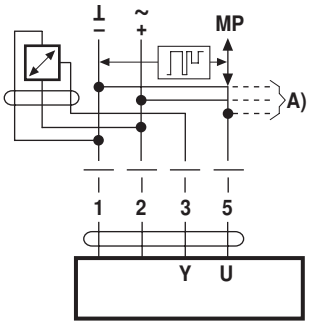

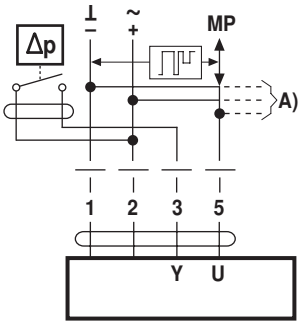

A) more actuators and sensors (max.8)
- Switching current 16 mA @ 24 V
- Start point of the operating range must be parameterised on the MP actuator as ≥ 0.5 V

Connection of passive sensors

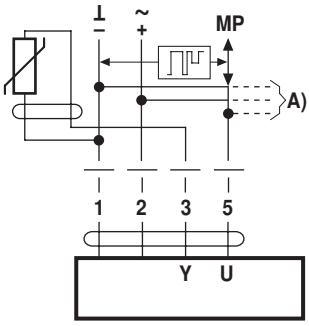

Ni1000	–28...+98°C	850...1600 Ω 2)
PT1000	–35...+155°C	850...1600 Ω 2)
NTC	–10...+160°C 1)	200 Ω...60 kΩ 2)

A) more actuators and sensors (max.8)
1) Depending on the type
2) Resolution 1 Ohm

Functions with basic values (conventional mode)

Override control with AC 24 V with relay contacts

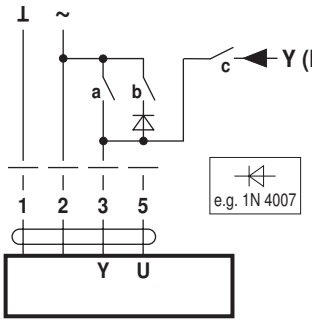

	a	b	c
0%	⁄	⁄	⁄
ZS 50%	⁄	⊥	⁄
100%	⊥	⁄	⁄
Y	⁄	⁄	⊥

Override control with AC 24 V with rotary switch

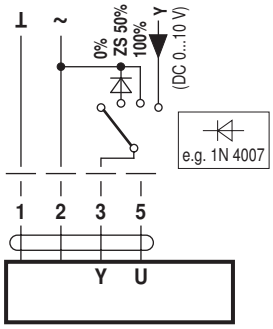

Functions

Remote control 0...100% with positioner SG..

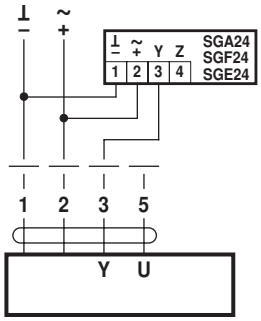

Minimum limit with positioner SG..

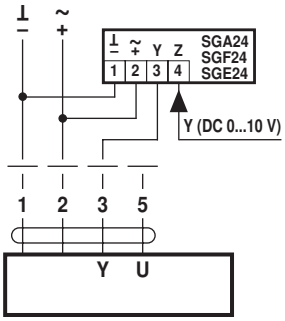

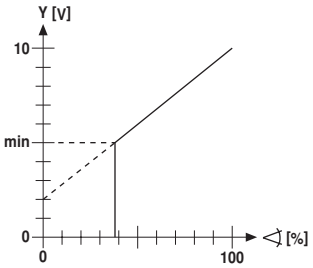

Follow-up control (position-dependent)

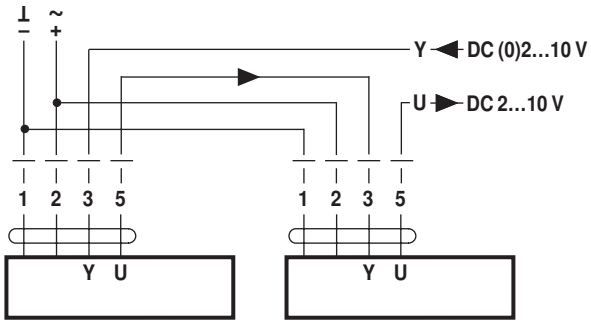

Control with 4...20 mA via external resistor

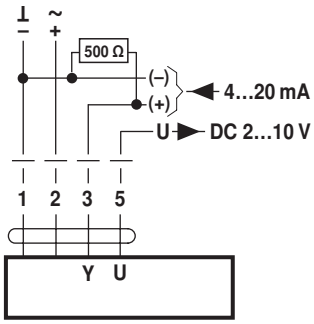

Caution:
The operating range must be set to DC 2...10 V.
The 500 Ω resistor converts the 4...20 mA current signal to a voltage signal DC 2...10 V

Functional check

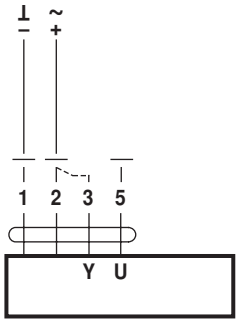

Procedure
1. Apply 24 V to connection 1 and 2
2. Disconnect connection 3:
- with upwards direction of motion: closing point at top
- with downwards direction of motion: closing point at bottom
3. Short circuit connections 2 and 3:
- Actuator runs in the opposite direction

Functions for actuators with specific parameters (Parametrisation with PC-Tool necessary)

Override control and limiting with AC 24 V with relay contacts

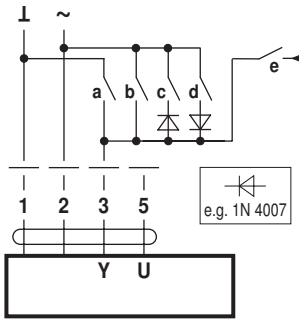

	a	b	c	d	e
Close [1]	⊥	–	–	–	–
MIN	–	–	–	–	–
ZS	–	–	⊥	–	–
MAX	–	⊥	–	–	–
Open	–	–	–	⊥	–
Y	–	–	–	–	⊥

Override control and limiting with AC 24 V with rotary switch

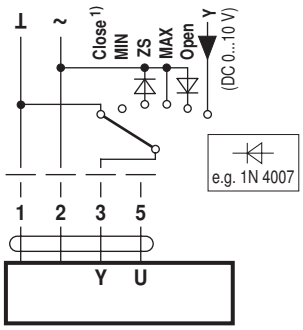

1) **Caution:** This function is only guaranteed if the start point of the operating range is defined as min. 0.5 V.

Functions

Control Open/Close

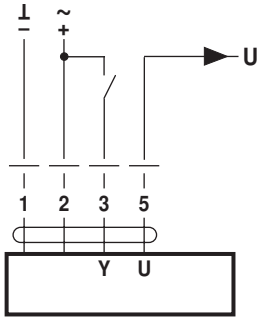

Control 3-point

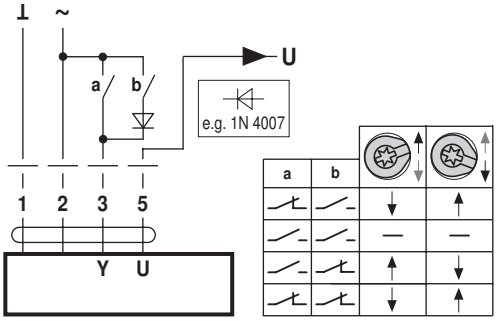

Operating controls and indicators

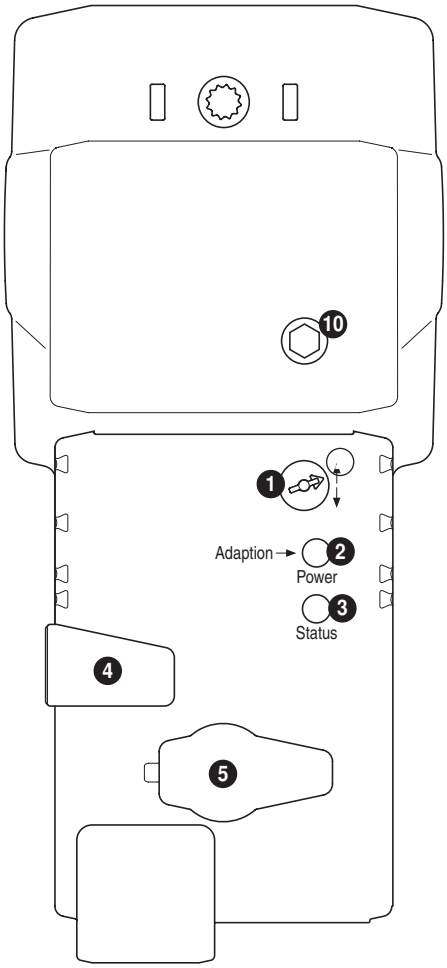

1 Direction of stroke switch

Switch over:	Direction of stroke changes

2 Push-button and LED display green

Off:	No power supply or malfunction
On:	In operation
Press button:	Triggers stroke adaptation, followed by standard mode

3 Push-button and LED display yellow

Off:	Standard mode
Flickering:	MP communication active
On:	Adaptation process active
Flashing:	Request for addressing from MP master
Press button:	Confirmation of the addressing

4 Gear disengagement button

Press button:	Gear disengages, motor stops, manual override possible
Release button:	Gear engages, standard mode

5 Service plug

For connecting parameterisation and service tools

10 Manual override

Clockwise:	Actuator spindle extends
Counterclockwise:	Actuator spindle retracts

Check power supply connection

2 Off and 3 On	Possible wiring error in power supply

Service

Notes

- The actuator can be parameterised by PC-Tool and ZTH AP via the service socket.

Service Tools connection

ZTH AP connection

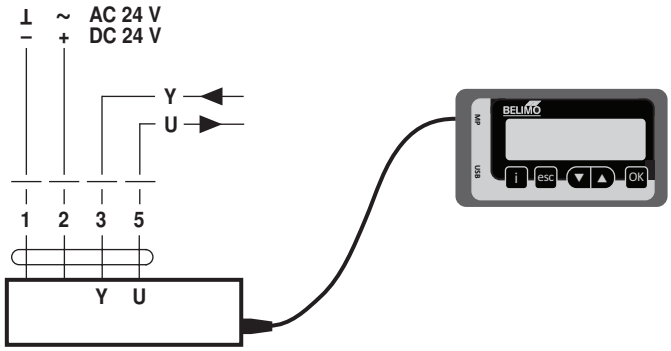

PC-Tool connection

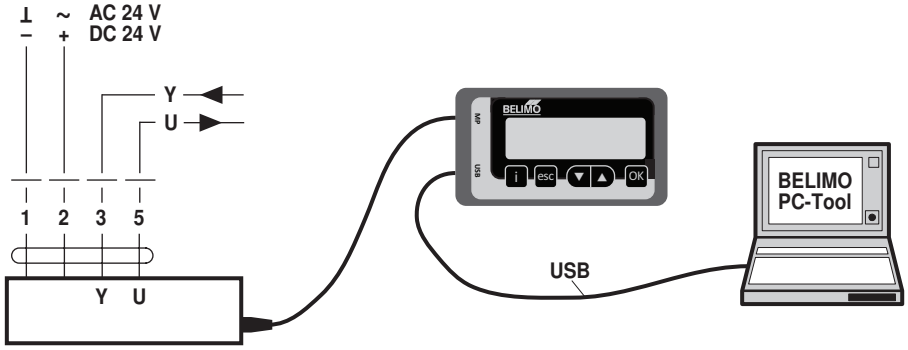

Dimensions [mm]
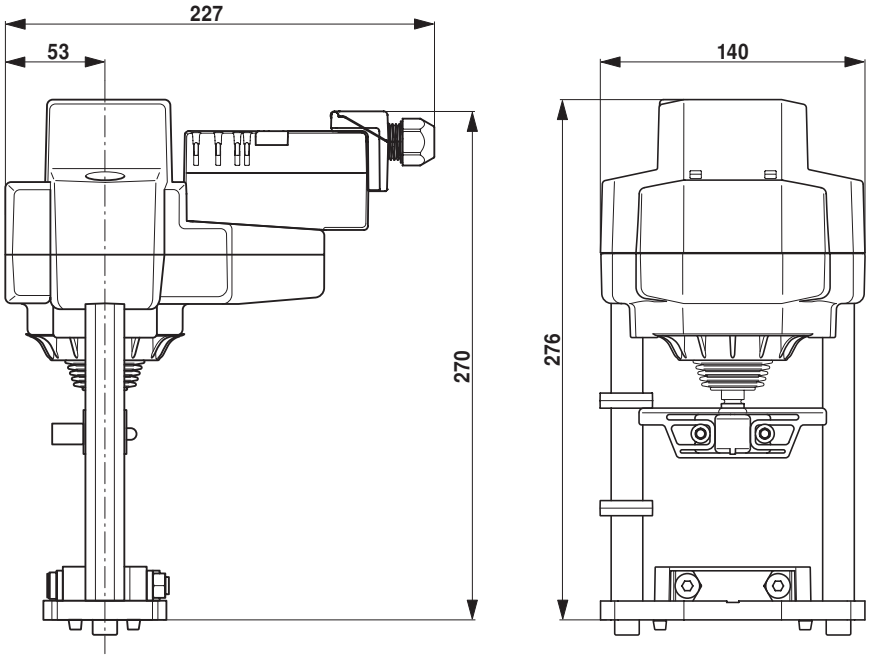
Dimensional drawings