Service-Tool for parameterisable and communicative Belimo actuators /VAV controllers and HVAC performance devices.

Connection via service socket on the device or MP/PP connection.

ZIP-USB function

Technical data

Electrical data	Power supply	AC 24 V, 50/60 Hz, DC 24 V (from actuator)
	Operating range	AC 19,2 ... 28,8 V / DC 21,6 ... 28,8 V
	Power consumption Operation	1 W
Connection	Socket for connecting cable ZK	ZK1-GEN (5m) supplied with connector
	USB 2.0 Interface	USB socket Type B, connecting cable (1 m) with socket A to B supplied
	Optional cables	ZK2-GEN, ZK6-GEN
Interface	Communication	Point to Point (PP), no Bus mode possible (MP)
Operating modes	Parameterization	Point to Point connection Connection using Service socket on the actuator or terminals
	MP-level converter (ZIP-Function)	Connection on the cabinet or over service socket on the actuator MP-Monitor operation, connection on the MP-Bus
Operating	LCD-display	2 x 16 characters, with background illumination
	Keys	i / esc / ▼ / ▲ / OK
Safety	Protection class	III Safety extra-low voltage
	Electromagnetic compatibility	CE in accordance with 2004/108/EG
	Operating temperature	0 … 50 °C, non-condensing
	Non-operating temperature	-20 … 50 °C, not-condensing
Dimensions / Weight	Dimensions	L x W x D: 95 x 55 x 25 mm
	Weight	Approx. 135 g

Definitions

ZTH AP

The ZTH is sold worldwide. Therefore the product name for the Asia region is defined as ZTH AP. On the product information, the expression ZTH is representative for the ZTH AP.

Actuators

For simplicity ,In this documentation the terms actuators, VAV-Controller, fire damper actuators and HVAC performance devices are summarized by the term actuators.

Supported devices

Damper product range	..-MF / ..-MP / ..-MPL / ..-MFT(2) /..-MOD / ..LON	
Valve product range	..-MF / ..-MP / ..-MPL / ..-MFT(2) /..-MOD / ..LON	
EPIV – pressure-independent characterised control valve	P6..W..-MP (EU) / EPIV-xx-xxx (AP)	Available starting 2011
Fire damper actuator B	BF-Top Line with BKN230-24MP	
VAV product range	VRD2 / VRD2-L	available 1992-2007
	VRD3	available starting 2008
	VRP-M (VAV- und STP-applications)	available starting 2005
	NMV-D2..	available 1992 to 2000
	LMV-D2M / NMV-D2M	available 2000 to 2006
	LMV-D2-MP / NMV-D2-MP / SMV-D2-MP.., LHV-D2-MP..	available 2006 to 2011
	LMV-D2LON / NMV-D2LON	available 2006 to 2011
	LMV-D3-MP / NMV-D3-MP / SMV-D3-MP.., LHV-D3-MP..	available starting 2011
	LMV-D3LON / NMV-D3LON	available starting 2011
	LMV-D3-MOD / NMV-D3-MOD	available starting 2012
HVAC performance devices	According to system description (e.g. Energy Valve)	
sharedlogic	According to system description	

Safety Notes

- **The device is not allowed to be used outside the specified field of application, especially in aircraft or in any other airborne means of transport..**
- **Connection allowed only to Belimo-devices with 24 V- safety extra-low voltage and PP/MP-interface.**
- **Changes of parameters, etc. may not be performed except after consultation/specification of the OEM, device or mechanical/electrical contractor. Operating and adjustment regulations must be observed.**

Connection ZTH AP

Connection and power supply

The ZTH's power is supplied via the actuator. The connection is set up
• directly at the Service socket of the actuator or
• via the PP/MP connection (U5) e.g. connection socket, in the control cabinet, room controller CR24

Types of connection and connection cables

Suitable cable
ZK1-GEN

Suitable cable
ZK2-GEN

Suitable cable
ZK4-GEN

Suitable cable
ZK6-GEN

Connection in the MP-Bus system

Direct connection to the MP bus or MP master is not possible with the ZTH-GEN.

Solution: Use the service socket on the actuator or temporarily disconnect the MP-connection of the MP-device from the MP-bus and connect the ZTH-GEN to the MP connection.

Connection ZIP function

Connection via the service socket

Local connection via the service socket cable ZK1-GEN

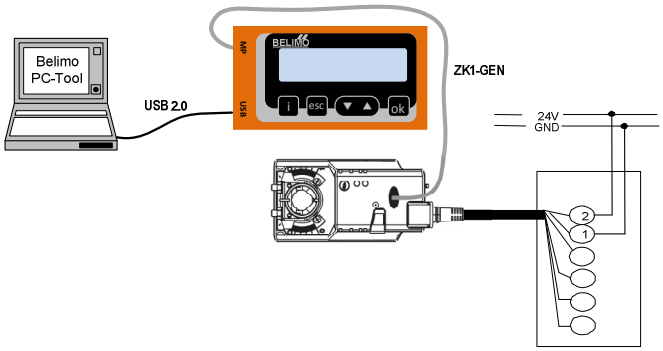

Connection via connection cable

Local connection via ZK2-GEN

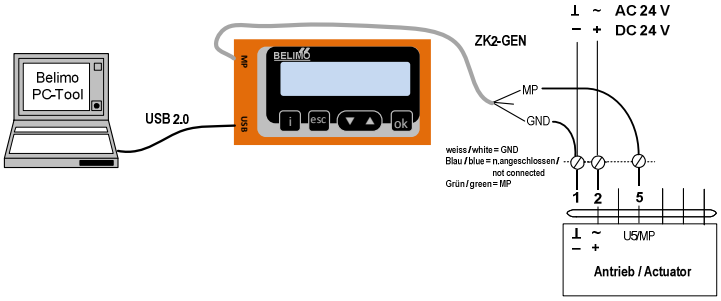

PC-Tool as MP-Master

– to parameterize the actuators via MP-Bus
– set points for the simulation of actuators via the MP-Bus
– reading of the sensors that are connected to the MP-Bus
– recording of graphical trends

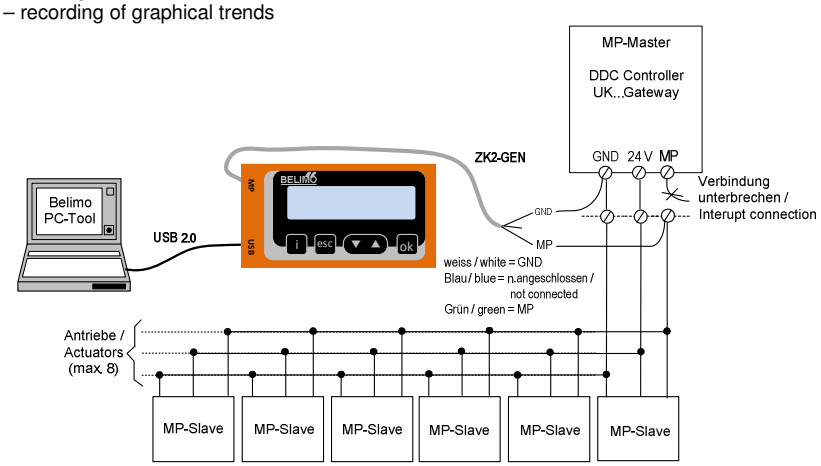

Connection ZIP function

PC-Tool connection via ZK6 -GEN, ZK4-GEN on Belimo gateways

For connection to the UK24MOD and UK24BAC the cable ZK6-GEN can be used
For connection to the UK24EIB and UK24LON the cable ZK4-GEN can be used

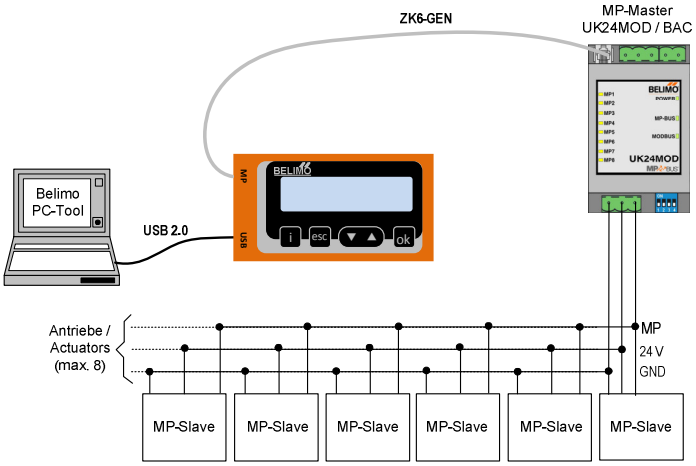

Connection ZIP-function

PC-Tool as MP-Monitor

Check the MP-communication with the MP-Monitor tool (Module in PC-Tool V3.x)

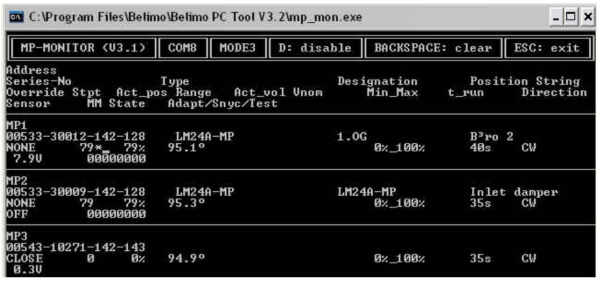

PC-Tool Monitor connection ZK2-GEN on MP-Master

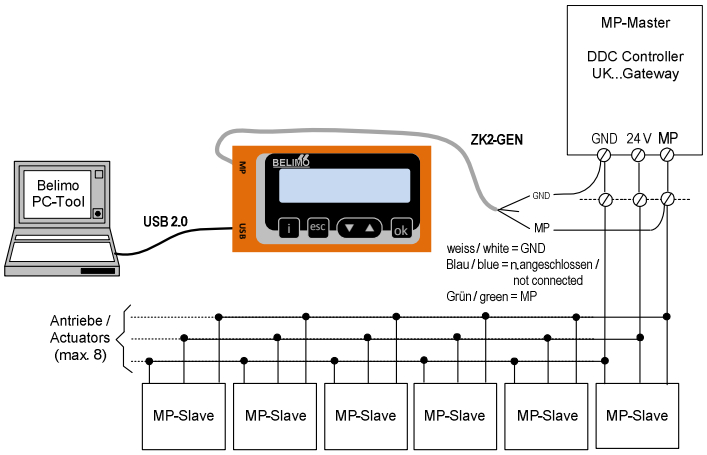

PC-Tool Monitor connection on tool socket with ZK6-GEN, ZK4-GEN

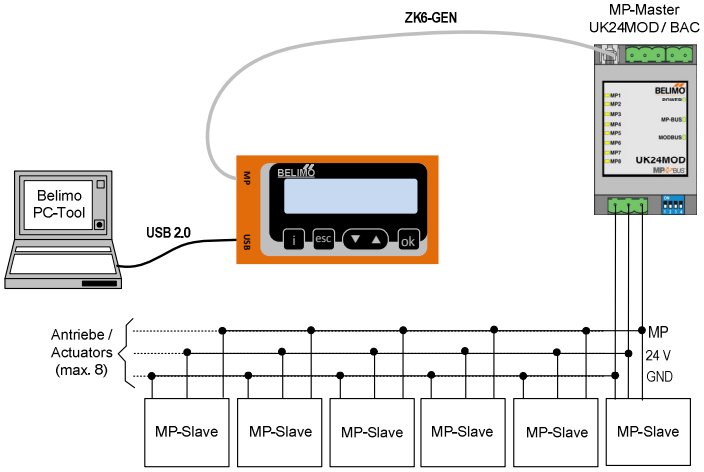

Operating

When connecting the ZTH to the actuator, the control unit will start and read the data from the connected device.
The available settings and user options are displayed according to the device type.
The available configuration parameters are listed in the product information of all actuators.

Operating elements

LCD display

- Background illumination
- Display 2 x 16 characters

Key function

▼ and ▲	Forward /backward Value / change Status
OK	Confirm entry, change to submenu
ESC	Abort entry, leave submenu, discard changes
i	shows additional information if available

RJ12 Connection socket

USB Connection socket

for PC communication

Language setting, unit depiction

Language and units can be set in the Configuration menu.

Operating

Operating is context-related, i.e. the user sees only the options available for the connected device.
The corresponding Configuration table is read from the actuator for this purpose. In addition to the parameter type, this table also contains the corresponding divisions,
e.g.: minimally adjustable running time/type. Non-relevant options are not displayed.

Menu structure, handling

The operating menu can be run through from both sides (▲▼ Keys).

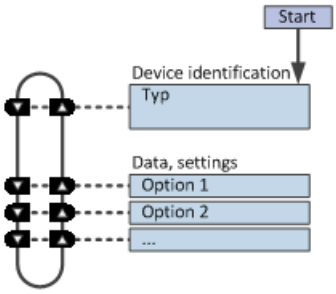

Change values

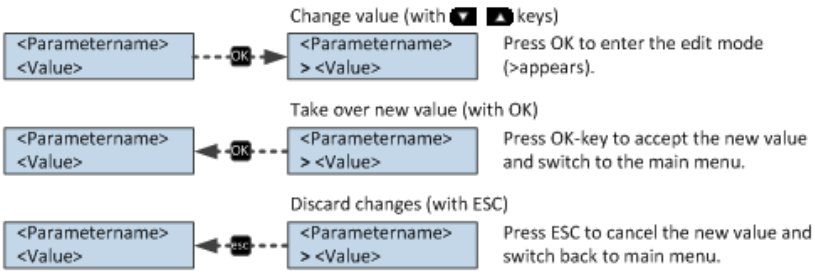

Operating

Starting / ending

The connection to the actuator is started by plugging in the RJ plug and terminated by unplugging it.

Device specifications/Technical data

For a more detailed description, including setting parameters, we draw your attention to the respective separate product information. Check specific product documents.

Configuration

Start configuration

1. Press the key (OK) while simultaneously plugging in the connecting cable
2. Configuration menu display appears

Configuration Menu

Option / Display	**Setting**	**Product range**	**Explanation**
Language	German / **English**	-	
Empty cache	Yes / **No**	-	Function to delete data profiles of HVAC actuators from the local cache
Backlight timeout	After 0..255 sec off / **always active**	-	Setting backlight duration in seconds
Show favourites	disabled/ **after 1…65535 s**	HVAC performance devices (Energy Valve)	Alternating display of the first 3 values after the set time
OEM-Number	0…**65535**	VAV	
Advanced Mode [1)]	Yes / **no**	VAV Fire damper Modbus	Enable settings: – VAV: Direction of rotation – VAV: set Vmin / Vmax to original values (call up OEM setting) – BF-Top: Adaption – Modbus: Base-Address
Expert Mode [1)]	Yes / **no**	VAV Valves	Enable settings: – VAV: Switching mode – VAV: Vmid parameter – VAV: Altitude compensation – Valves: Y characteristic curve
PICCV-Function	Yes / **no**	Valves	Belimo US Enable PICCV Wizard function
Measuring voltage supply	Value V (AC)	-	
Pressure unit	Pa / **inWC**	VAV	
Flow unit (Water)	m^3/h / **l/min** / gpm	Valves	
Flow unit (Air)	**m^3/h** / l/s / cfm	VAV	
Exit configuration	ESC		

Activate option [1)] only as needed and with the respective know-how; the adjustment of the respective parameters requires special expertise.

Basic functions

Device identification

The following menu tree shows the basic functions which are identical to all devices.

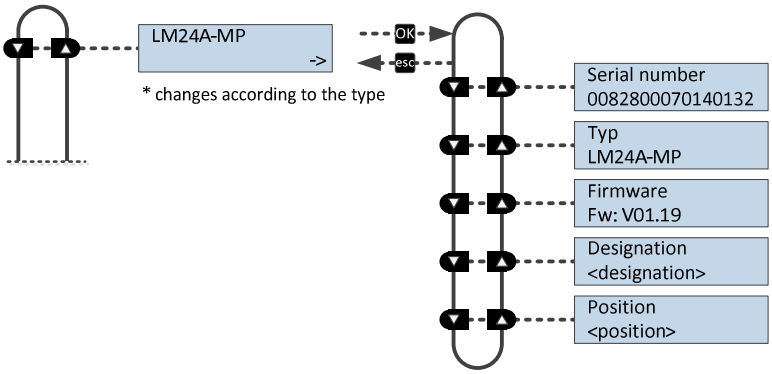

MP-Address

In MP-capable actuators the MP-Address (PP, MP1-MP8) can be set.

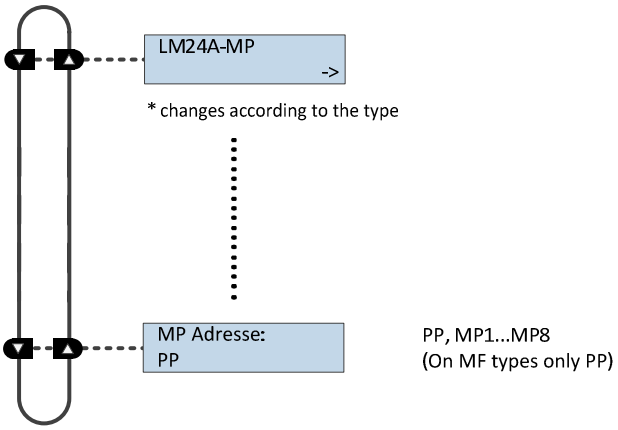

Modbus actuators

Modbus specific communication settings of an actuator with integrated Modbus interface (..-MOD).

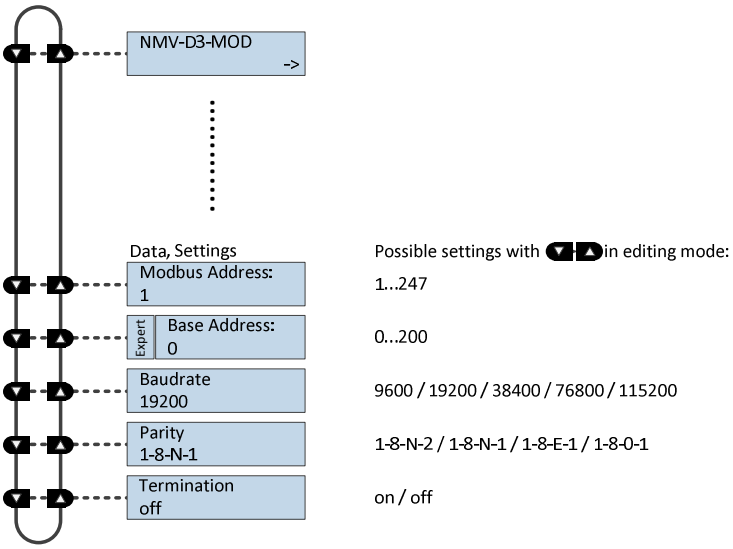

Functions for damper / valve product range

The ZTH recognizes the device family of the connected device automatically
The menu and the settings are shown related to the connected device.

Menu tree

The following menu tree shows the possible settings and values of an LM24A-MP.

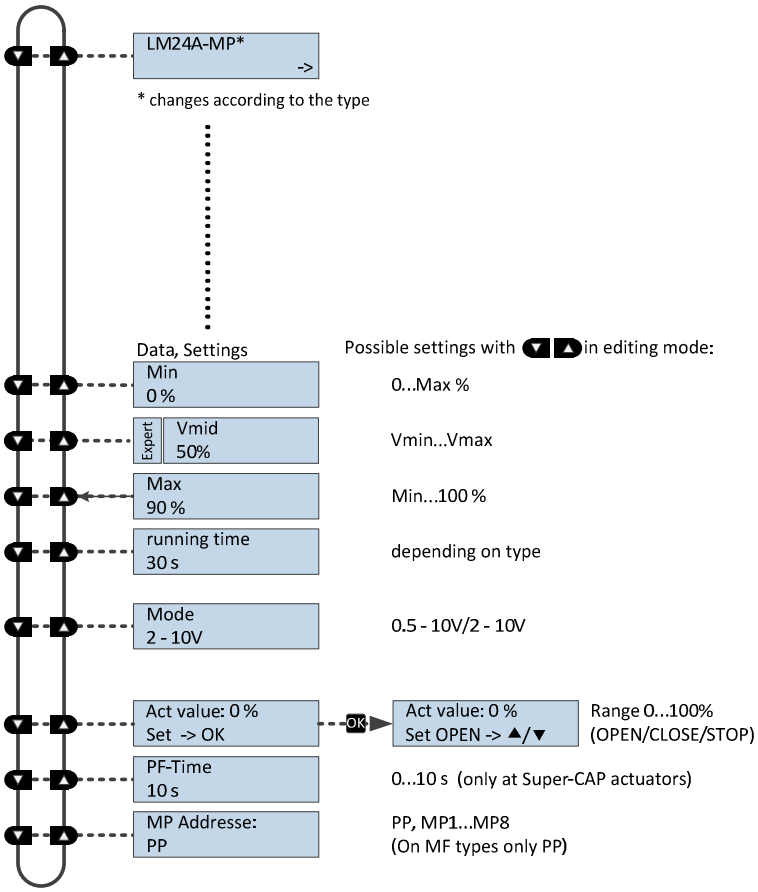

Functions for globe valve product range

The ZTH recognizes the device family of the connected device automatically
The menu and the settings are shown related to the connected device.

Menu tree The following menu tree shows the possible settings and values of an NVK24A-MP-TPC.

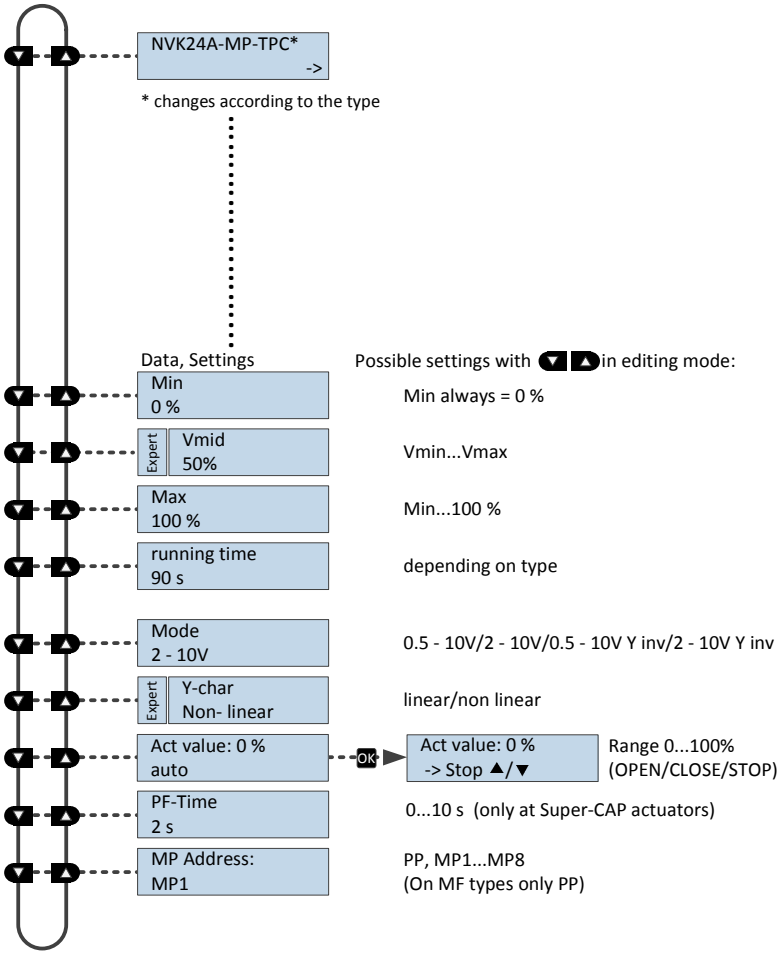

Functions for EPIV – pressure-independent control valve

Menu tree The following menu tree shows the possible settings and values of an EPIV.

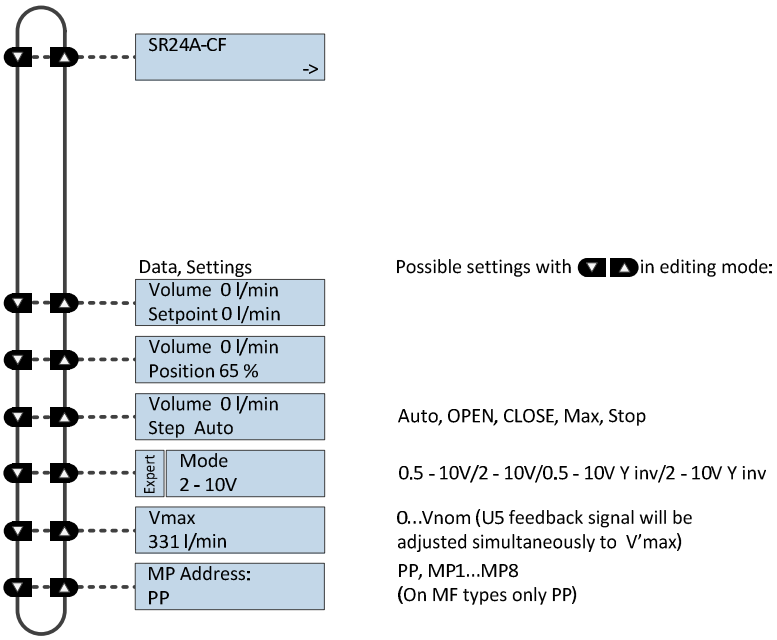

Functions for VAV-product range

Menu tree The following menu tree corresponds to the new VAV-Compact D3 generation: L/N/SMV-D3-MP, LHV-D3-MP, L/ NMV-D3LON , 1) L/MNV-D3-MOD

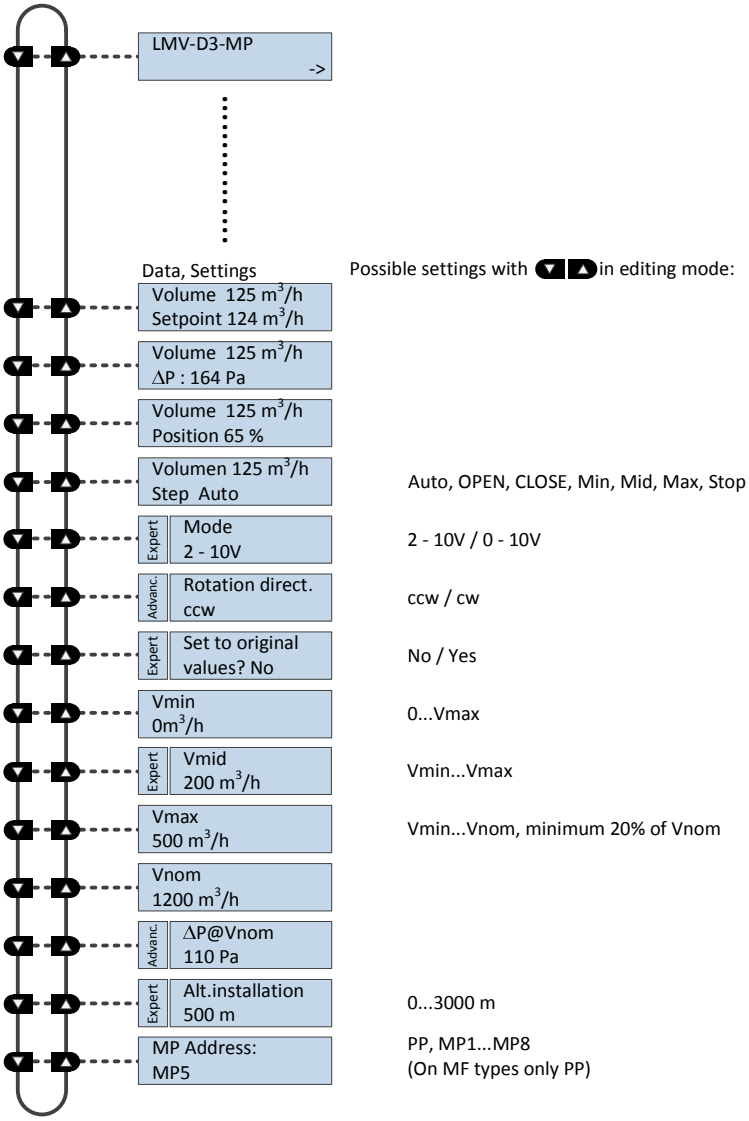

Deviations

VRD2 (1992-2007)	Display actual value/setpoint in [% Vnom], Vmin in [% Vmax], Vmax in [% Vnom]	Read only	PP
VRD3 (starting 2008)	Display actual value/setpoint in [% Vnom], Vmin in [% Vnom], Vmax in [% Vnom]	HW potentiometer setting «Tool» → Read/write, otherwise → Read only	PP
VRP-M VAV	up to V2.16 Vmin in [% Vmax], Vmax in [% Vnom] starting with V3.0 Vmin in [% Vnom], Vmax in [% Vnom]		PP / MP1…8
NMV-D2 (1992 – 2000) **NMV-D2M** (2000 – 2006)	Display actual value/setpoint in [% Vnom], Vmin in [% Vmax], Vmax in [% Vnom		PP PP / MP1…8
Altitude compensation	This function requires VAV-Compact D3 with firmware V2.06 (03/2013) or higher and ZTH with firmware V2.01 or higher		

Information: VAV-Universal actuators
The V-actuators L/N/SM24A-V, L/NMQ24A-SRV-ST, which fit the VAV universal controllers VR.., have a tool connection but are nevertheless not tool-capable!

1) Modbus settings, see previous description of " Basic functions for Modbus actuators"

Functions for MPL-devices

Menu tree The following menu tree shows the possible settings and values of an MPL-actuator.

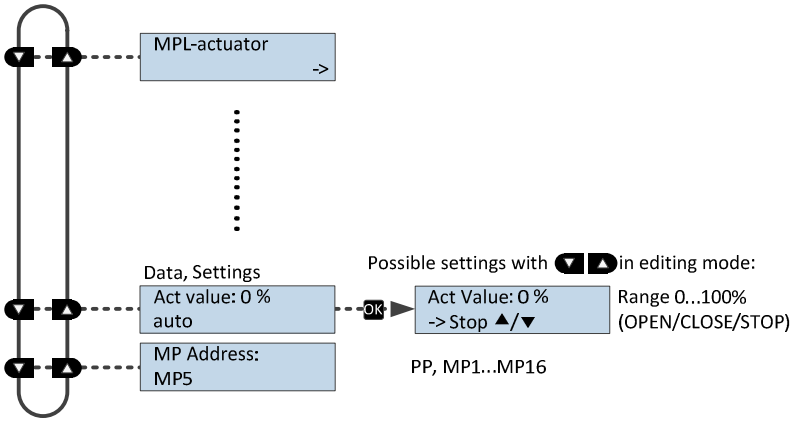

Functions for fire dampers BF-TopLine

Menu tree The following menu tree shows the possible settings and values of a BF-TopLine actuator.

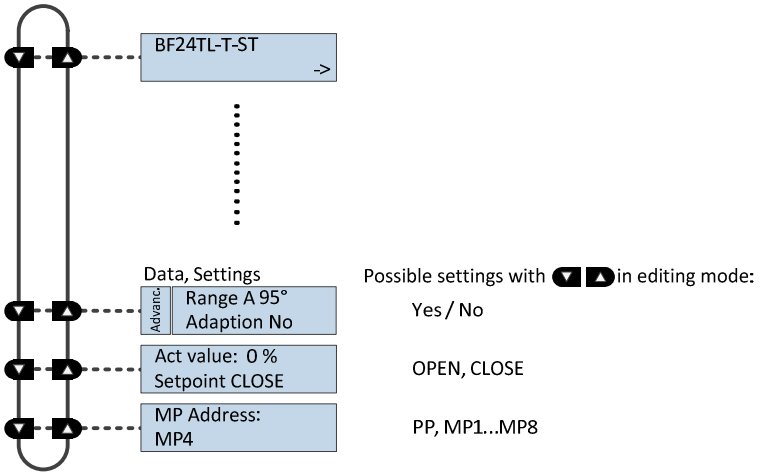

ZIP Functions

In this configuration, the ZTH works as a level converter between the USB port of a PC and the Belimo MP device

The correct driver will be automatically installed on the PC when plugging the ZTH.

When the USB interface is connected, the ZTH switches to ZIP mode.

Note:
If the ZTH is connected to the PC, the screen flashes a few times until the driver is installed on the PC.

ZIP Disabled

ZIP disabled

ZIP Master

ZIP Master
Tx: Rx:

Connection as MP master e.g. PC
If bus communication is present, this is indicated by flashing of Tx and Rx on the display.

ZIP Monitor

ZIP Monitor
Tx: Rx:

Connection at monitor function with the PC-Tool
If bus communication is present, this is indicated by flashing of Tx and Rx on the display.

Checking the power supply

Checking the power supply

The ZTH AP offers the possibility of checking the AC 24V power supply (III safety extra-low voltage) of the Belimo devices. Voltages >30V are not permitted!
Application e.g. Commissioning, troubleshooting in the event of a malfunction.
Measurement procedure

Equipment: ZTH, ZK2-GEN
Connection:
- connect free wires of the ZK2-GEN to AC 24V.
  - white on GND (Connection 1 actuator)
  - blue on ~ (connection 2 actuator)
  - third wire (turquoise) do not connect
- Do not connect RJ12 plug to ZTH-GEN yet!

Start:
- Press the ZTH-GEN key (OK) while at the same time connecting the RJ12 plug
- Select Supply function with arrow key (▼)

End:
- Disconnect ZTH-GEN RJ12 plug or end Configuration function (ESC)

Display

Supply. okay
AC 25V, VHW: 85%

Quality: okay: AC supply in the division 19.2 ... 28.8V
AC value: measured AC voltage (accuracy ±1.0V insofar as VHW >95%)
VHW: Relationship of positive to negative half-wave
The deviation of the positive half-wave value to the value of the negative half-wave may not be too large. As a rule: positive HW / negative HW x 100 should be >80%.

Explanation VHW

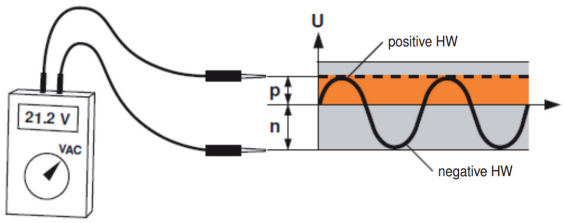

Possible problems
The following items influence the half-wave load:
- Transformer too small in its dimensions
- long signal cable length from transformer to VAV controller

Firmware Upgrade

The ZTH AP can be updated using the ZTH updater to the latest firmware version.
Please contact the nearest Belimo organisation for the required software and the instructions for the upgrade.

Compatibilities

Function and operation of the new ZTH

The ZTH AP includes the functionality of all previous versions of the ZTH-GEN and ZTH-VAV

Actual information to:
- **Firmware Upgrades**
- **Version overview, documentation**

See www.belimo.eu

The hardware of the ZTH is not compatible with the hardware of the ZTH-GEN. The updates of the ZTH-GEN cannot be loaded to the ZTH

In addition, the new ZTH supports the ZIP-USB function. This can be used with for the ZTH EU updates and as well as level converter USB/MP for the PC-Tool

ZEV The ZEV Adjuster (1992 to 2007) is replaced by the ZTH.

ZTH-VAV Is replaced by the new ZTH.

ZTH-GEN V2.xx / V3.xx / V4.xx Is replaced by the new ZTH.

Version overview

V 2.01 Release of the ZTH and ZIP function

All-inclusive.

- 5-year warranty
- On site around the globe
- A complete range of products from one source
- Tested quality
- Short delivery times
- Comprehensive support

Headquarters

BELIMO Holding AG
Brunnenbachstrasse 1
CH-8340 Hinwil
Tel. +41 43 843 61 11
Fax +41 43 843 62 68
info@belimo.ch
www.belimo.com

Subsidiaries, Representatives and Agencies

Albania
Algeria
Argentina
Australia
Austria
Bahrain
Belarus
Belgium
Bosnia
Brazil
Bulgaria
Cameroon
Canada
Central America
Chile
China
Croatia
Cyprus
Czech Republic
Denmark
Egypt
Estonia
Finland
France
Georgia
Germany
Greece
Great Britain
Hong Kong
Hungary
Iceland
India
Indonesia
Ireland
Israel
Italy
Japan
Jordan
Kazakhstan
Korea
Kuwait
Latvia
Lebanon
Libya
Lithuania
Luxembourg
Macedonia
Malaysia
Malta
Mexico
Moldova
Montenegro
Morocco
Netherlands
New Zealand
Norway
Oman
Pakistan
Philippines
Poland
Portugal
Qatar
Romania
Russia
Saudi Arabia
Serbia
Singapore
Slovakia
Slovenia
South Africa
Spain
Sri Lanka
Sweden
Switzerland
Taiwan
Thailand
Tunisia
Turkey
United Arab Emirates
Ukraine
United States of America
Vietnam

Belimo worldwide: www.belimo.com

BELIMO®